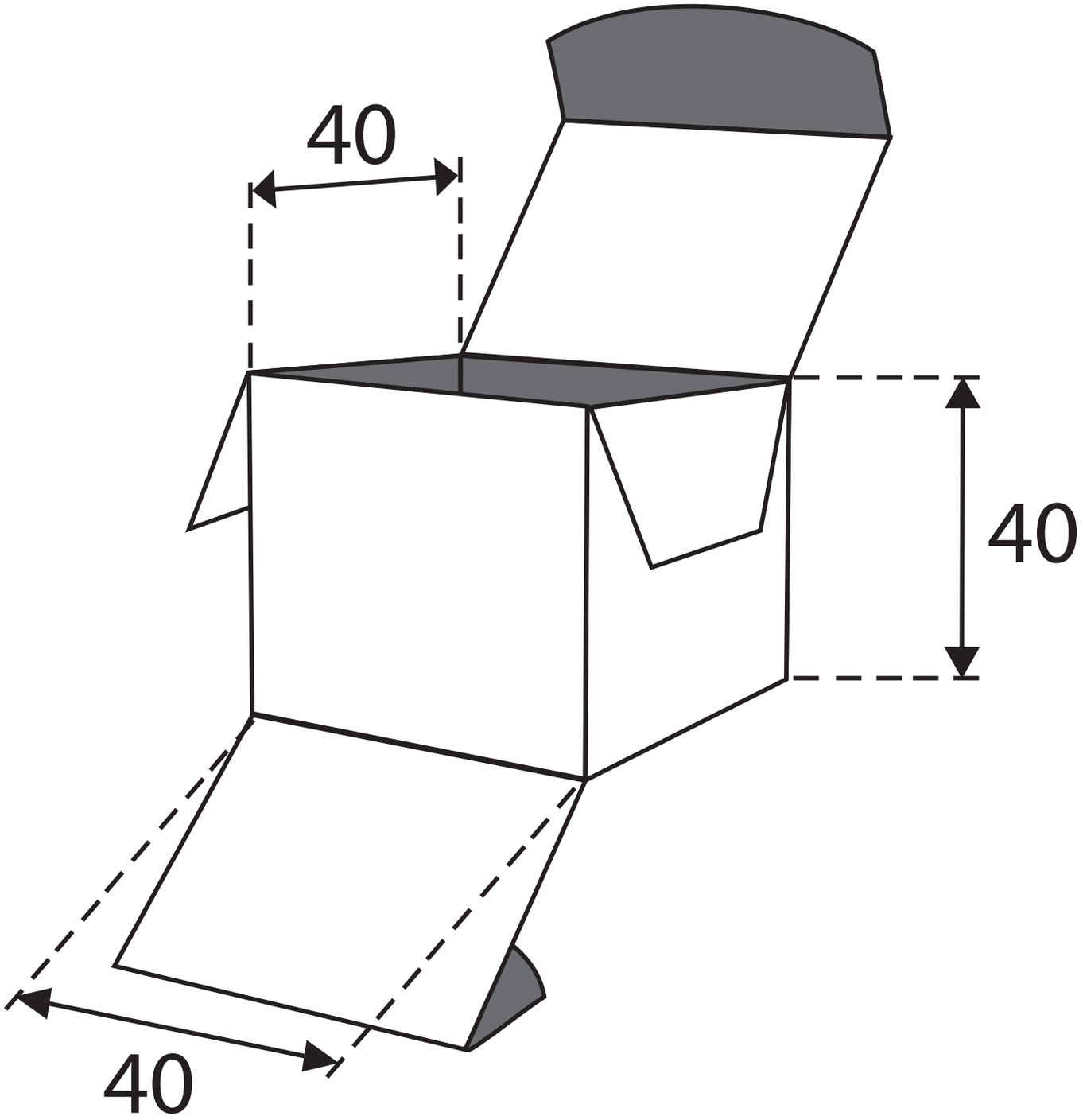
40
40
40